Revisions		
Issue	**Date**	**Note**
2	06/02/2026	See GTXPDC/1196

DATASHEET

1. Mechanical

Fixing method	Panel
Durability	500 mating cycles

2. Environmental

RoHS Compliant	Yes
Temperature Range	-65 to +165 degrees C

3. Electrical

Impedance	50 ohms
Interface Frequency	4 GHz
Working Voltage	500 Volts RMS Maximum

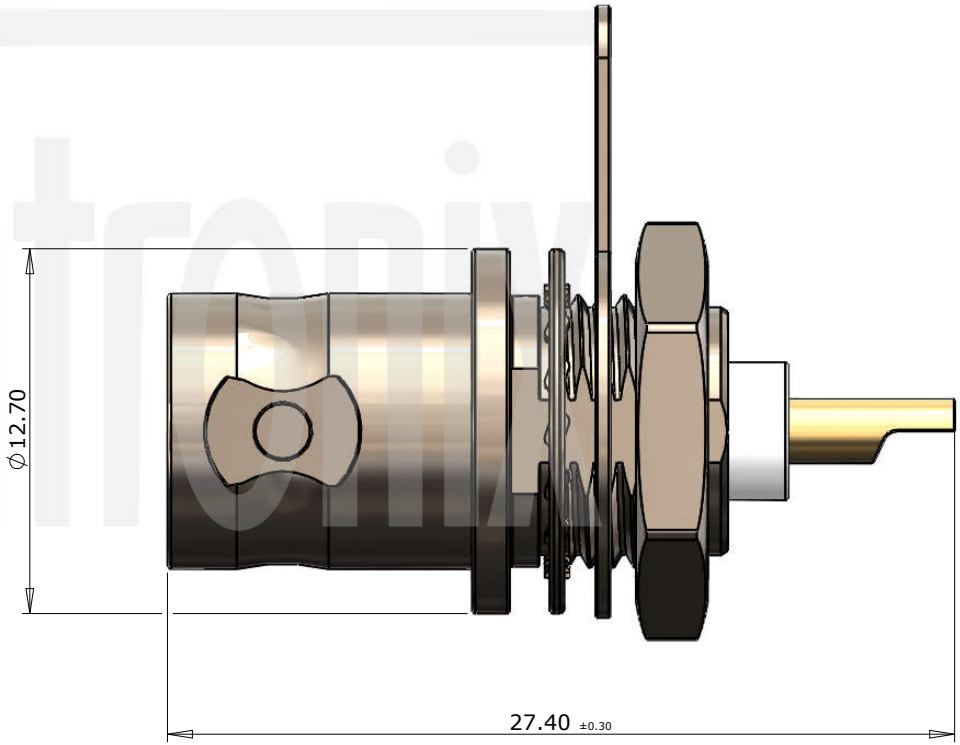

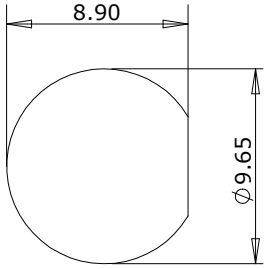

Panel Cutout

6	Washer	SK5	Nickel
5	Solder Tag	Brass	Nickel
4	Lock Nut	Brass	Nickel
3	Dielectric	PTFE	White
2	Contact	Phosphor Bronze	Gold
1	Body	Brass	Nickel
	Description	**Material**	**Finish**

Unless otherwise specified tolerances
0.5-5 = ±0.2
›5-30 = ±0.4
›30-120 = ±0.6
›120-315 = ±1.0
›315-1000 = ±1.6
Angles = ±5°
Units = mm

This document is the confidential property of Gigatronix Limited and may not be copied, reproduced or transmitted to any third party without written authorisation.

Author	PJP
Drawn by	PJP
Drawing date	18/12/2025
Checked by	DB
Checked date	18/12/2025
Scale	Not to scale

Part Number BN62-X001-N06-2

Title: BNC Panel Jack, Solder Receptacle, Nickel Plated, 50 ohms